PANCHIP

PAN107x series

Datasheet

V2.0 May. 2025

Confidential

Panchip Microelectronics Co., Ltd.

BLE SoC Transceiver

General Description

PAN107x series integrates BLE5.3 and 2.4GHz dual-mode wireless SoC transceiver. The transceiver works in the 2.400-2.483GHz universal ISM frequency band. There is a 512KB Flash program memory and a 48KB SRAM memory. In addition, PAN107x series is equipped with a wealth of peripherals, including up to 26 GPIOs, 8-channel PWM, one 32-bit timer, two 24-bit timers, one I2C, two UARTs, two SPIs, seven external channels ADC, WDT, WWDT, USB2.0(Full Speed), 32K RC etc. PAN107x series is suitable for application of wireless mouse, smart home and electronic shelf label, BLE-AOA indoor locating.

Key Features

- **MCU**
  - 32-bit MCU core running up to 48MHz
- **Memory**
  - 512KB flash supporting deep power-down mode
  - 48KB SRAM
  - 128B eFuse
  - 4KB I-cache
- **Low Power**
  - Active mode RX: 2.5mA@1Mbps (DCDC)
  - Active mode TX at 0dBm: 5.06mA(DCDC)
  - Standby mode: 0.28uA
  - Standby mode(32K SRAM retention): 1.88uA(GPIO, XTL, RCL can wake up)
  - Deep sleep mode: 3.37uA(All Logic Retention, GPIO, XTL, RCL can wake up)
- **Clock**
  - 32MHz RC
  - 32MHz XTAL
  - 32kHz RC
  - 32.768kHz XTAL
  - DPLL(48MHz)
- **RF**
  - Mode
    - BLE5.3 modes: 1Mbps, 2Mbps, 500kbps, 125kbps
    - Proprietary 2.4GHz: 1Mbps, 2Mbps, 500kbps, 250kbps, 125kbps, supporting hardware ACK
  - Output power: up to 9dBm
  - Receiver
    - -99dBm@125kbps
    - -99dBm@500kbps
    - -96dBm@1Mbps
    - -93dBm@2Mbps
  - RSSI
    - Resolution: 0.25dB
    - Accuracy: ±2dB
    - Range: -90 to -15dBm
  - Single antenna supported
  - Safety regulations: BQB / ETSI / FCC
  - Broadcast and Scan each 37 38 39 Channel per time in one second. The average power is about 13 uA.
- **Peripheral**
  - Up to 26 GPIOs
  - 8-channel PWM
    one 32-bit timer, two 24-bit timers
  - One I2C
  - Two UARTs
  - Two SPIs
  - 2-channel DMA
  - 12-channel ADC (7 ext, VBG_1P2, VBG_VT, 1/4VDD, VBG_0P6, Temp2)
  - WDT / WWDT
  - IO / BOD / POR / LVR / System reset
  - FMC(Support IAP, support the boot loader with address 0x0)
  - Clock measurement and clock calibration
  - USB2.0(Full_speed)
  - Flash data encryption
- **Temperature sensor**
  - Support temperature sensor
  - Test range: -40 to 85℃
- **Power Management**
  - Integrated voltage regulator
  - Operating voltage: 1.8 to 3.6V
    (DCDC ON: 2 to 3.6V)
- **Package**
  - QFN32(4*4) / QFN20(3*3)
  - QFN40(5*5) / LGA20
- **Operating Condition**
  - Operating temperature: -40 to 85℃ / -40 to 105℃
  - Storage temperature: -60 to150℃

Typical Applications

- Electronic Shelf Label
- Wireless mouse
- LED light control

Confidential

Bluetooth Features

Bluetooth Low Energy Controller

The PAN107x series Bluetooth Low Energy Controller suppoRTS all low-energy features required by Bluetooth specification version 5.3. The controller suppoRTS the following:

- **Support 1M PHY, 2M PHY and Coded PHY (s2 and s8)**
- **Support Advertising, Scanning, Initiating and Connection (both of Central and Peripheral) role**
- **Up to 6 Link Layer state machines concurrently:**
  - 1 * Passive Scanning
  - 1 * Non-connectable advertising
  - 4 * Any other combinations (Legacy/Extended/Periodic Advertising, Scanning and Connection)
- **Support LE Features:**
  - LL Encryption
  - LE Data Packet Length Extension
  - LL Privacy
  - Extended Scanner Filter Policies
  - LE Extended and Periodic Advertising
  - Channel Selection Algorithm #2
  - Constant Tone Extension
- **Support Update Channel Statistics**

Bluetooth Host

- **Generic Access Profile (GAP) with all possible LE roles**
  - Peripheral & Central
  - Observer & Broadcaster
- **GATT (Generic Attribute Profile)**
  - Server (to be a sensor)
  - Client (to connect to sensors)
- **Pairing support, including the Secure Connections feature from Bluetooth 4.2**
- **Non-volatile storage support for permanent storage of Bluetooth-specific settings and data**
- **Clean HCI driver abstraction**
  - 3-Wire (H5) & 5-Wire (H4) UART
  - SPI
  - Local controller support as a virtual HCI driver

Bluetooth Mesh

- **Compatible with Bluetooth SIG Mesh Profile 1.0.1**
- **Support Mesh Provisioning**
- **Provisioner: PB-ADV**
- **Provisionee: PB-ADV, PB-GATT and PB-Remote**
- **Support Mesh Node Feature: Relay, Proxy, Friend, LPN**
- **Support Mesh Models**
  - SIG Models: Config Model, Health Model and Generic Models (Onoff and Light Con-trol Models)
  - SIG Developing Models: PB-Remote Model and SIG OTA Model
- **Support multiple smart speakers control concurrently for BaiDu Xiaodu, Alibaba Ali-genie and Amazon Echo**
- **Support network control: HeartBeat, Subnet, Secure Beacon and Group Control**
- **Support switch control for over 256 nodes without delay**
- **Mesh Security**
  - Provisioning: FIPS P-256 Elliptic Curve
  - Message: AES-CCM Encryption
  - Network: SEQ Control, IV Index and Key Fresh

Proprietary Radio 2.4GHz Features

- Support 250K, 1M and 2M PHY
- XN297L, PAN1026 protocol compliant
- Support No Acknowledge, Acknowledge and Acknowledge with payload
- Support CRC8, CRC16 and CRC24
- Support whitening
- Compatible with Bluetooth frame structure, can simulate Bluetooth broadcast and scanning
- Compatible with Bluetooth CODED PHY S2/S8
- Support 2-byte address
- Support the same spread spectrum function as the BLE protocol

Confidential

Content

General Description 2
Key Features 2
Typical Applications 2
Bluetooth Features 3
Bluetooth Low Energy Controller 3
Bluetooth Host 3
Bluetooth Mesh 3
Proprietary Radio 2.4G Features 3
Content 4
1 Naming rule 7
2 Ordering information 8
3 Block Diagram 9
4 Pin Information 10
4.1 Pin Diagram 10
4.2 Pin Descriptions 14
5 Electrical specification 19
5.1 RF characteristics 19
5.2 GPIO characteristics 23
5.3 Reset characteristics 24
5.4 Clock characteristics 25
5.5 ADC characteristics 26
5.6 PMU characteristics 28
5.7 General operating conditions 28
5.8 DCDC characteristics 29
5.9 ESD characteristics 29
5.10 Absolute maximum ratings 30
5.11 MCU current characteristics 30
6 Application Reference Diagram 33
7 Package Dimensions 34
Abbreviation 38
Revision History 39
Contact Us 40

Confidential

List of Tables

Table 4-1 Pin Descriptions 14
Table 5-1 RF characteristics 19
Table 5-2 TX characteristics 19
Table 5-3 RX characteristics 20
Table 5-4 RSSI characteristics 21
Table 5-5 RF Timing characteristics 21
Table 5-6 RF power characteristics 22
Table 5-7 GPIO characteristics (single IO) 23
Table 5-8 Combined test 23
Table 5-9 nRESET Input Characteristics 24
Table 5-10 Reset characteristics 24
Table 5-11 HXTAL characteristics 25
Table 5-12 LXTAL characteristics 25
Table 5-13 32MHz RCH characteristics 25
Table 5-14 32kHz RCL characteristics 26
Table 5-15 DPLL characteristics 26
Table 5-16 Power supply and input range conditions 26
Table 5-17 ADC built-in voltage reference 27
Table 5-18 Time parameters 27
Table 5-19 Linearity parameter 27
Table 5-20 RIN 27
Table 5-21 PMU characteristics 28
Table 5-22 General operating conditions 28
Table 5-23 DCDC characteristics 29
Table 5-24 ESD characteristics 29
Table 5-25 Absolute maximum ratings 30
Table 7-1 Package Dimension for QFN40 34
Table 7-2 Package Dimension for QFN32 35
Table 7-3 Package Dimension for QFN20 36
Table 7-4 Package Dimension for LGA20 37

Confidential

List of Figures

Figure 3-1 Block Diagram 9
Figure 4-1 QFN 40 Diagram 10
Figure 4-2 QFN 32 Diagram 11
Figure 4-3 QFN 20 Diagram 12
Figure 4-4 LGA 20 Diagram 13
Figure 7-1 Package View for QFN40 34
Figure 7-2 Package View for QFN32 35
Figure 7-3 Package View for QFN20 36
Figure 7-4 Package View for LGA20 37

Confidential

1 Naming rule

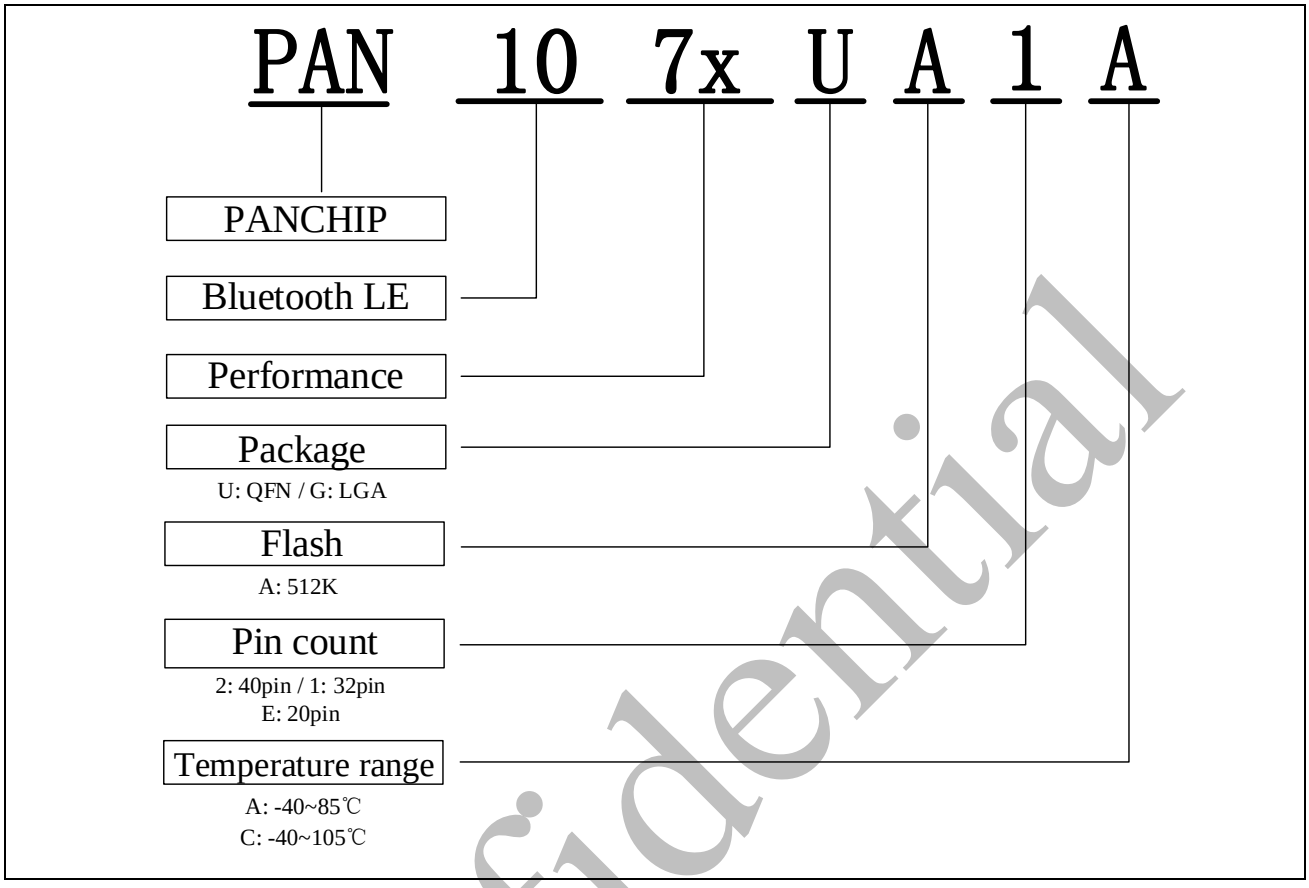

Confidential

2 Ordering information

Partnumber	Type	Pack-age	Pin Count	IO	FLASH	RAM	Temperature Range	Packing
PAN1070UA2A	BLE5.3	QFN	40	26	512K	48K	-40 to 85℃	Tape & Reel
PAN1070UA1A	BLE5.3	QFN	32	21	512K	48K	-40 to 85℃	Tape & Reel
PAN1070UA1C	BLE5.3	QFN	32	21	512K	48K	-40 to 105℃	Tape & Reel
PAN1070UAEC	BLE5.3	QFN	20	8	512K	48K	-40 to 105℃	Tape & Reel
PAN1070GAEC	BLE5.3	LGA	20	10	512K	48K	-40 to 105℃	Tape & Reel

Before ordering, please contact the sales window for the latest mass production information.

Confidential

3 Block Diagram

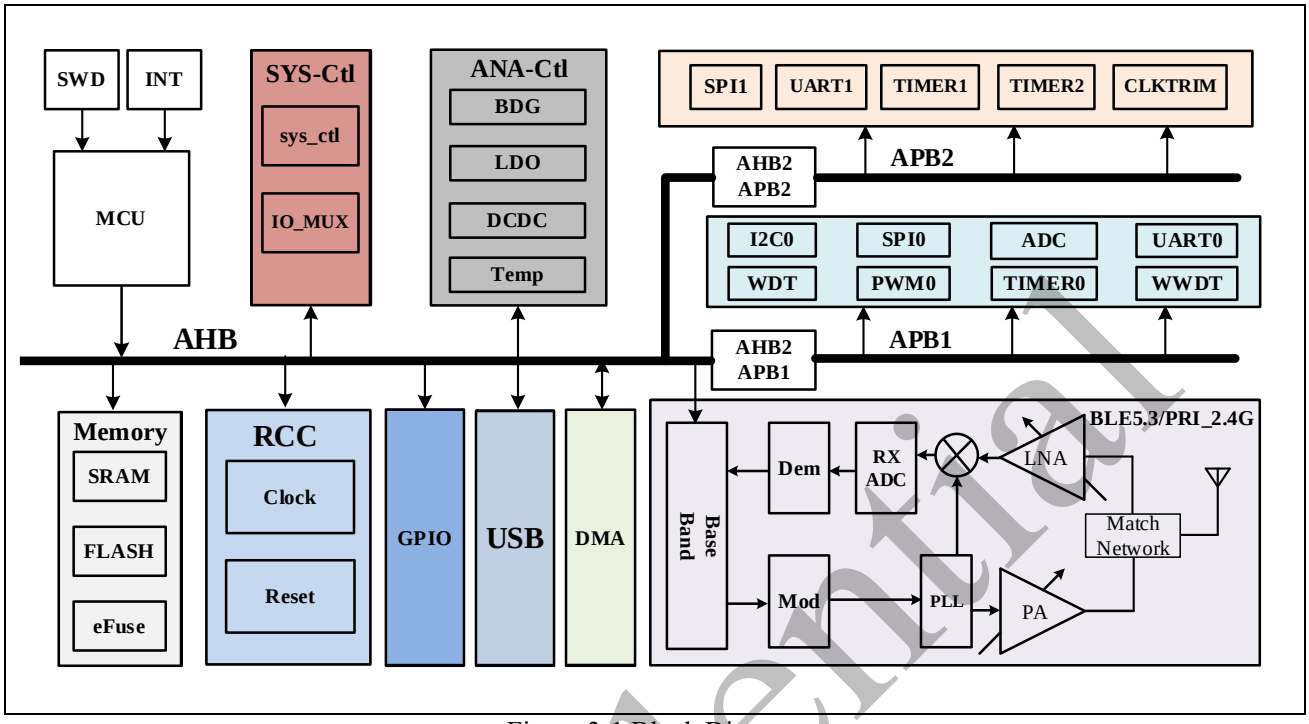

Figure 3-1 Block Diagram

Confidential

4 Pin Information

4.1 Pin Diagram

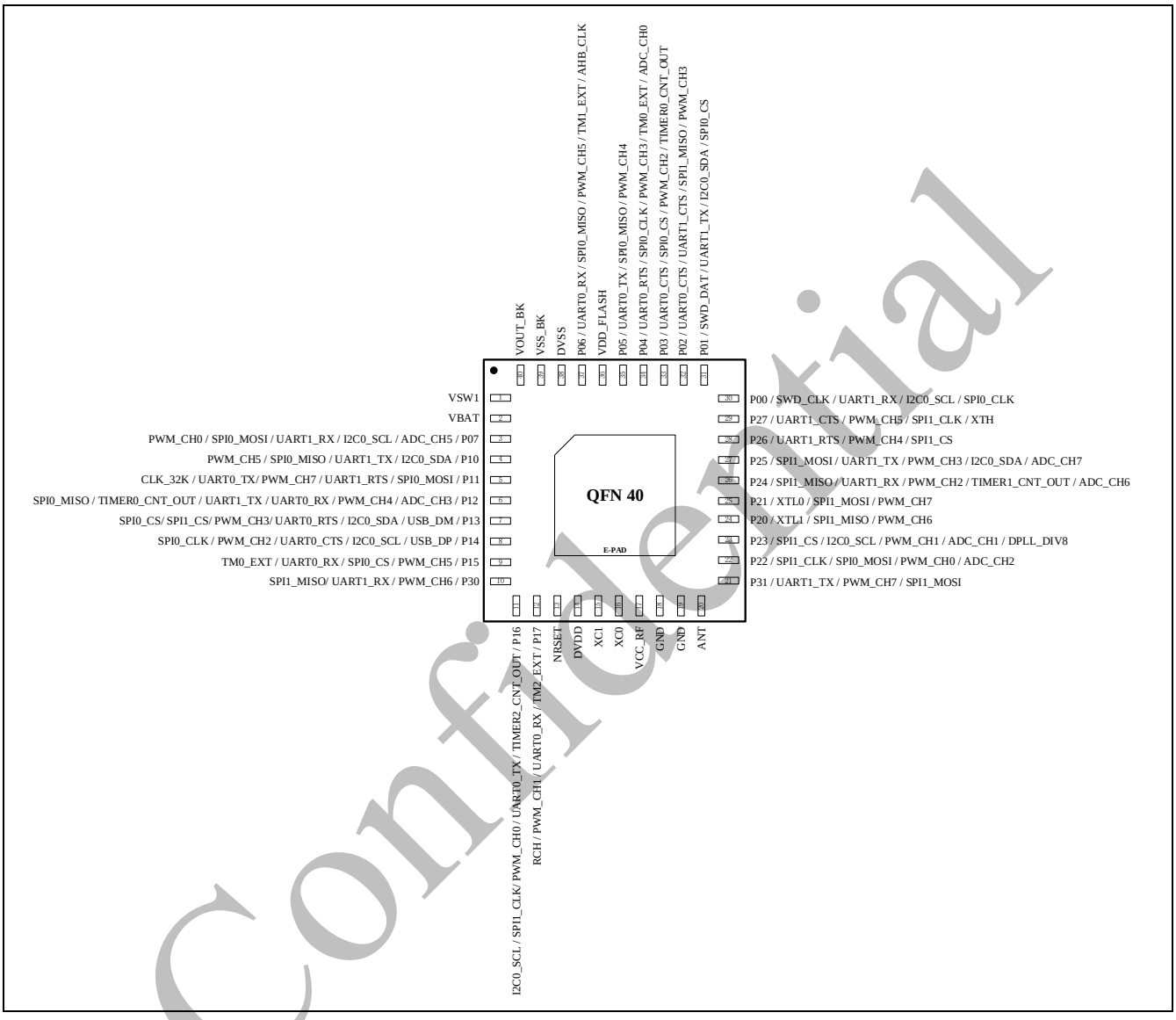

Figure 4-1 QFN 40 Diagram

Confidential

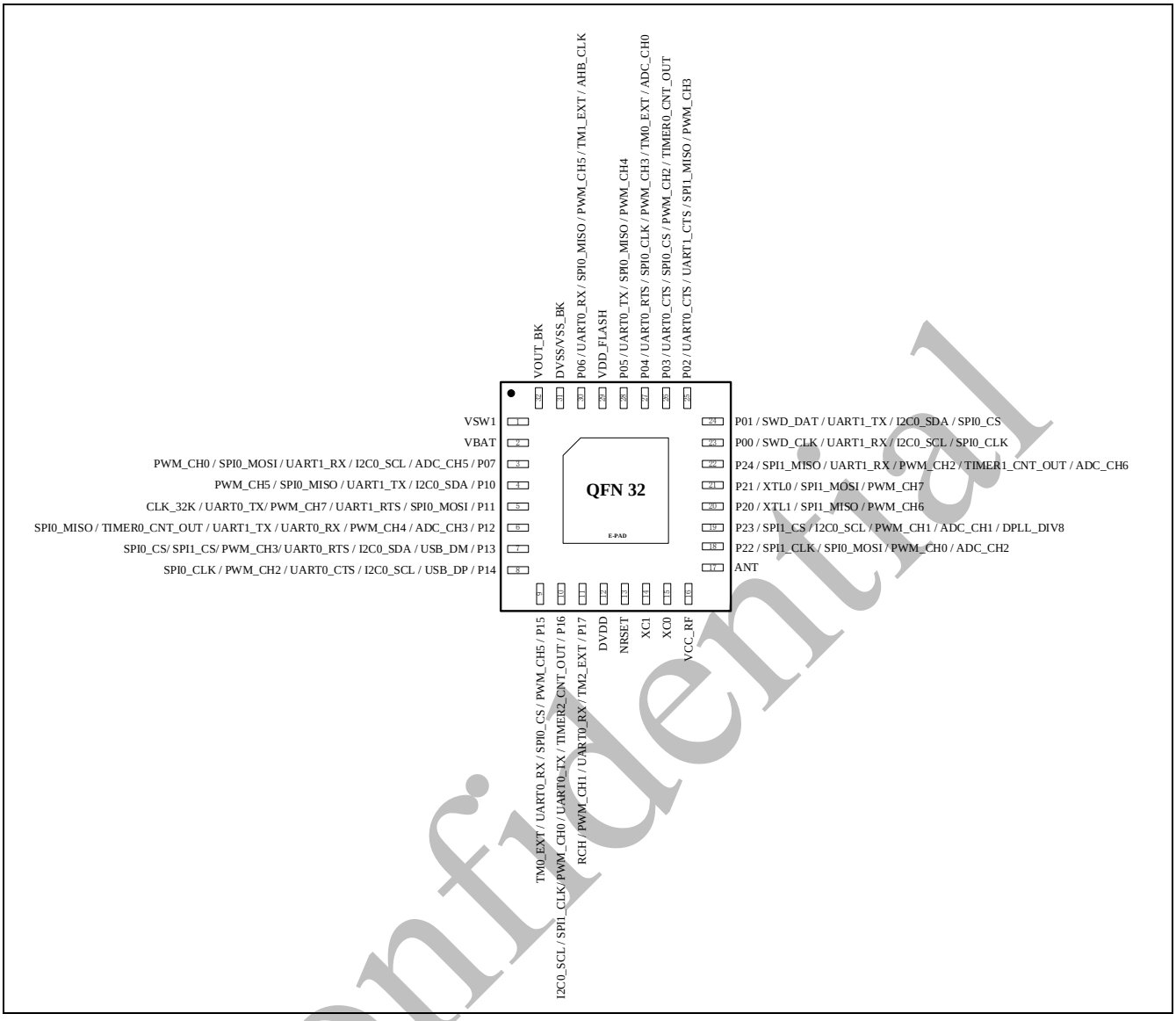

Figure 4-2 QFN 32 Diagram

Confidential

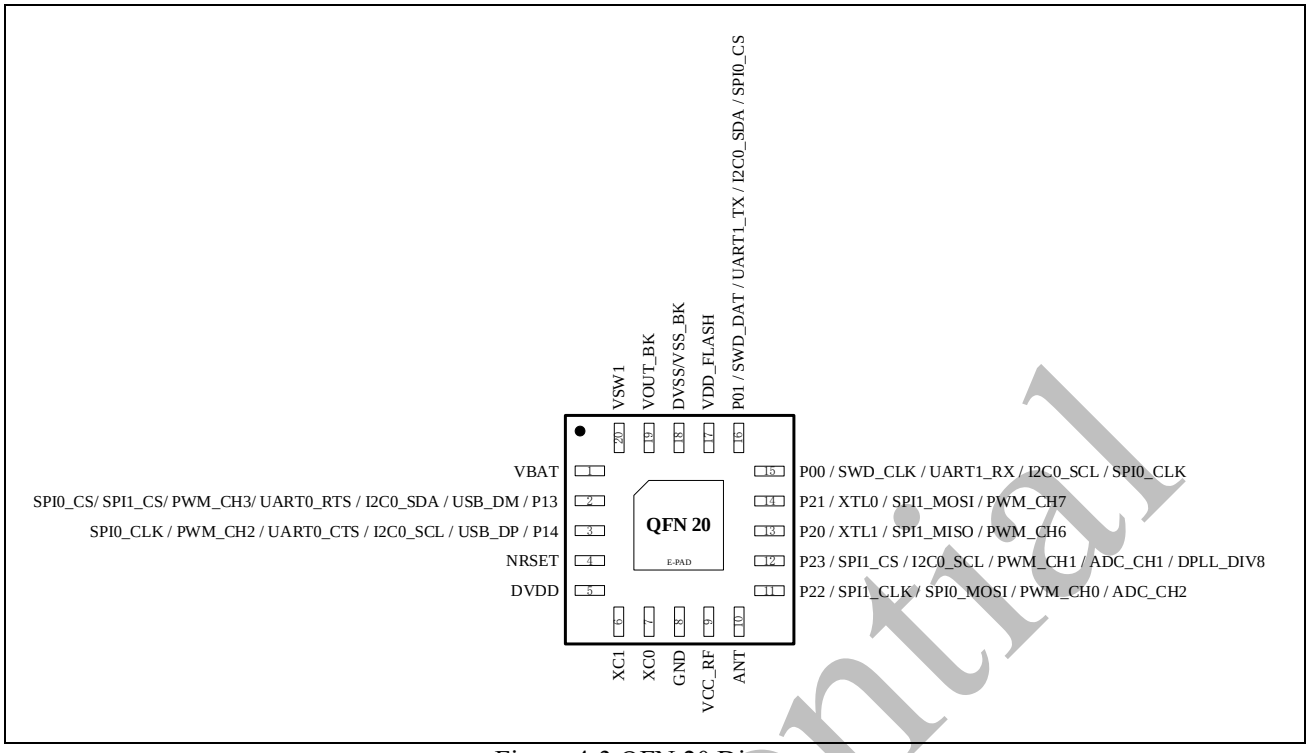

Figure 4-3 QFN 20 Diagram

Confidential

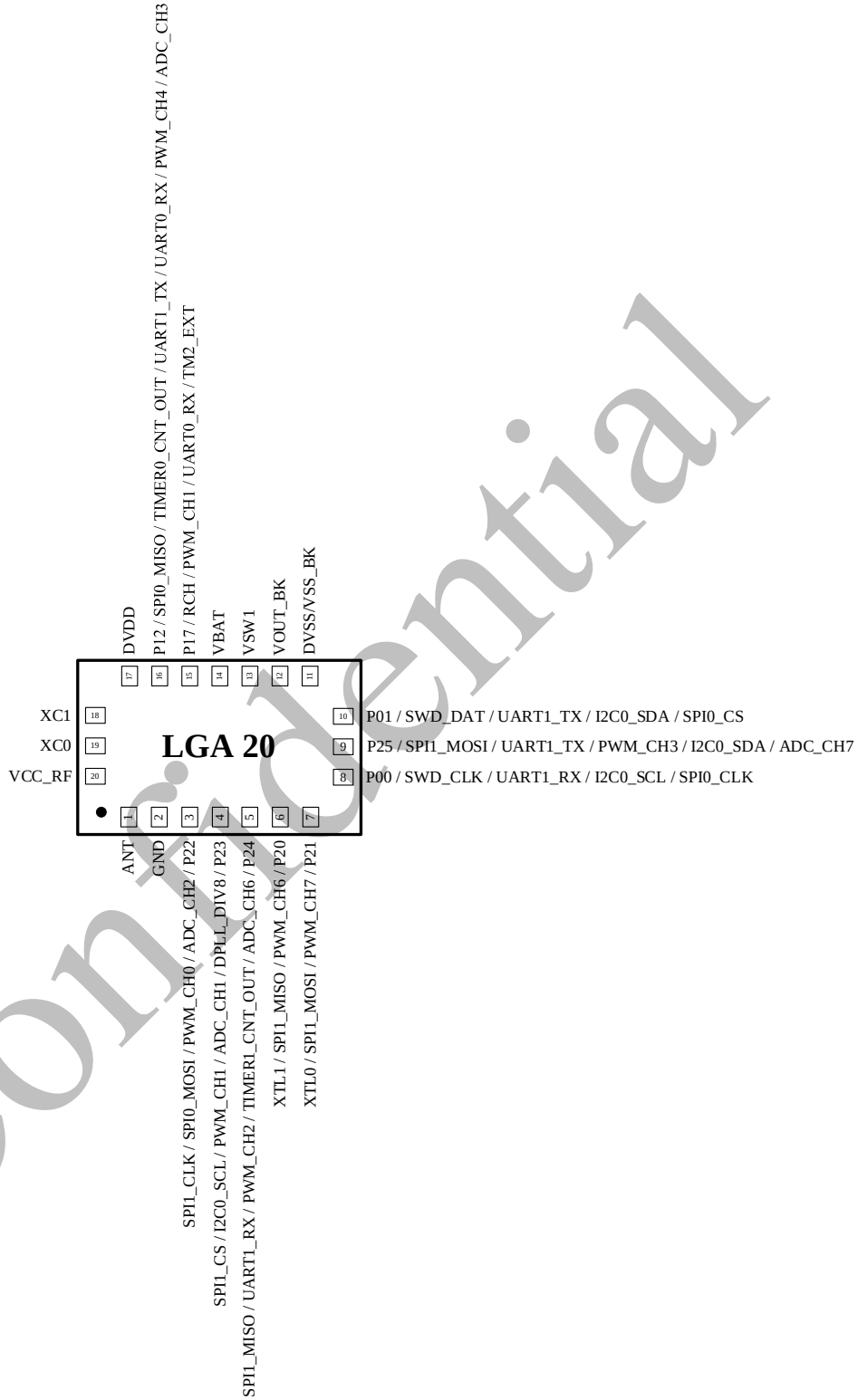

Figure 4-4 LGA 20 Diagram

Confidential

4.2 Pin Descriptions

Detail pin descriptions see Table 4-1.

Table 4-1 Pin Descriptions

Pin No.				Pin Name	Pin Type	Description
QFN40	QFN32	QFN20	LGA20			
1	1	20	13	VSW1	P	DCDC internal power switch (switching frequency is about 650kHz), an external inductor is required when using
2	2	1	14	VBAT	P	Power input (VDD)
3	3	-	-	P07	I/O	General-purpose digital input and output
				UART1_RX	I	UART1 RX
				I2C0_SCL	I/O	I2C0 SCL
				SPI0_MOSI	I/O	SPI0 MOSI
				PWM_CH0	O	Channel 0 PWM output
				ADC_CH5	AI	Channel 5 ADC input
4	4	-	-	P10	I/O	General-purpose digital input and output
				UART1_TX	O	UART1 TX
				I2C0_SDA	I/O	I2C0 SDA
				SPI0_MISO	I/O	SPI0 MISO
				PWM_CH5	O	Channel 5 PWM output
5	5	-	-	P11	I/O	General-purpose digital input and output
				UART1_RTS	O	UART1 RTS
				SPI0_MOSI	I/O	SPI0 MOSI
				PWM_CH7	O	Channel 7 PWM output
				CLK_32K	O	32kHz Clock Output
				UART0_TX	O	UART0 TX
6	6	-	16	P12	I/O	General-purpose digital input and output
				UART0_RX	I	UART0 RX
				TIMER0_CNT_OUT	O	Timer0 output
				UART1_TX	O	UART1 TX
				SPI0_MISO	I/O	SPI0 MISO
				PWM_CH4	O	Channel 4 PWM output
				ADC_CH3	AI	Channel 3 ADC input
7	7	2	-	P13	I/O	General-purpose digital input and output

Confidential

				UART0_RTS	O	UART0 RTS
				I2C0_SDA	I/O	I2C0 SDA
				PWM_CH3	O	Channel 3 PWM output
				SPI1_CS	I/O	SPI1 CS
				SPI0_CS	I/O	SPI0 CS
				USB_DM	AI/AO	USB dm
8	8	3	-	P14	I/O	General-purpose digital input and output
				UART0_CTS	I	UART0 CTS
				I2C0_SCL	I/O	I2C0 SCL
				PWM_CH2	O	Channel 2 PWM output
				SPI0_CLK	I/O	SPI0 clock
				USB_DP	AI/AO	USB dp
9	9	-	-	P15	I/O	General-purpose digital input and output
				SPI0_CS	I/O	SPI0 CS
				PWM_CH5	O	Channel 5 PWM output
				TM0_EXT	I	Timer0 external input
				UART0_RX	I	UART0 RX
10	-	-	-	P30	I/O	General-purpose digital input and output pin
				UART1_RX	I	UART1 RX
				PWM_CH6	O	Channel 6 PWM output
				SPI1_MISO	I/O	SPI1 MISO
11	10	-	-	P16	I/O	General-purpose digital input and output
				UART0_TX	O	UART0 TX
				PWM_CH0	O	Channel 0 PWM output
				SPI1_CLK	I/O	SPI1 clock
				I2C0_SCL	I/O	I2C0 SCL
				TIMER2_CNT_OUT	O	Timer2 output
12	11	-	15	P17	I/O	General-purpose digital input and output
				UART0_RX	I	UART0 RX
				TM2_EXT	I	Timer2 external input
				PWM_CH1	O	Channel 1 PWM output
				RCH	O	RCH output
13	13	4	-	NRSET	I	Reset pin

Confidential

14	12	5	17	DVDD	P	HLDO output , typical value 1.2V
15	14	6	18	XC1	AO	External 32MHz clock source output
16	15	7	19	XC0	AI	External 32MHz clock source input
17	16	9	20	VCC_RF	P	RF power input, can be directly connected to VOUT_BK
18	-	8	2	GND	P	Ground (VSS)
19	-	-	-	GND	P	Ground (VSS)
20	17	10	1	ANT	AI/AO	RF antenna , an external antenna is required for use
21	-	-	-	P31	I/O	General-purpose digital input and output pin
				UART1_TX	O	UART1 TX
				PWM_CH7	O	Channel 7 PWM output
				SPI1_MOSI	I/O	SPI1 MOSI
22	18	11	3	P22	I/O	General-purpose digital input and output
				SPI1_CLK	I/O	SPI1 clock
				PWM_CH0	O	Channel 0 PWM output
				SPI0_MOSI	I/O	SPI0 MOSI
				ADC_CH2	AI	Channel 2 ADC input
23	19	12	4	P23	I/O	General-purpose digital input and output
				SPI1_CS	I/O	SPI1 CS
				PWM_CH1	O	Channel 1 PWM output
				DPLL_DIV8	O	DPLL_DIV8 output
				I2C0_SCL	I/O	I2C0 SCL
				ADC_CH1	AI	Channel 1 ADC input
24	20	13	6	P20	I/O	General-purpose digital input and output
				XTL1	AO	External 32.768kHz clock source output
				SPI1_MISO	I/O	SPI1 MISO
				PWM_CH6	O	Channel 6 PWM output
25	21	14	7	P21	I/O	General-purpose digital input and output
				XTL0	AI	External 32.768kHz clock source input
				SPI1_MOSI	I/O	SPI1 MOSI
				PWM_CH7	O	Channel 7 PWM output
26	22	-	5	P24	I/O	General-purpose digital input and output
				UART1_RX	I	UART1 RX

Confidential

				SPI1_MISO	I/O	SPI1 MISO
				PWM_CH2	O	Channel 2 PWM output
				TIMER1_CNT_OUT	O	Timer1 output
				ADC_CH6	AI	Channel 6 ADC input
27	-	-	9	P25	I/O	General-purpose digital input and output pin
				UART1_TX	O	UART1 TX
				SPI1_MOSI	I/O	SPI1 MOSI
				PWM_CH3	O	Channel 3 PWM output
				I2C0_SDA	I/O	I2C0 SDA
				ADC_CH7	AI	Channel 7 ADC input
28	-	-	-	P26	I/O	General-purpose digital input and output pin
				UART1_RTS	O	UART1 RTS
				PWM_CH4	O	Channel 4 PWM output
				SPI1_CS	I/O	SPI1 CS
29	-	-	-	P27	I/O	General-purpose digital input and output pin
				UART1_CTS	I	UART1 CTS
				PWM_CH5	O	Channel 5 PWM output
				SPI1_CLK	I/O	SPI1 clock
				XTH	O	XTH output
30	23	15	8	P00	I/O	General-purpose digital input and output
				SWD_CLK	I	SWD clock input
				UART1_RX	I	UART1 RX
				I2C0_SCL	I/O	I2C0 SCL
				SPI0_CLK	I/O	SPI0 clock
31	24	16	10	P01	I/O	General-purpose digital input and output
				SWD_DAT	I/O	SWD data input and output
				UART1_TX	O	UART1 TX
				I2C0_SDA	I/O	I2C0 SDA
				SPI0_CS	I/O	SPI0 CS
32	25	-	-	P02	I/O	General-purpose digital input and output
				UART0_CTS	I	UART0 CTS
				SPI1_MISO	I/O	SPI1 MISO
				PWM_CH3	O	Channel 3 PWM output

Confidential

				UART1_CTS	I	UART1 CTS
33	26	-	-	P03	I/O	General-purpose digital input and output
				UART0_CTS	I	UART0 CTS
				SPI0_CS	I/O	SPI0 CS
				PWM_CH2	O	Channel 2 PWM output
				TIMER0_CNT_OUT	O	Timer0 output
34	27	-	-	P04	I/O	General-purpose digital input and output
				UART0_RTS	O	UART0 RTS
				SPI0_CLK	I/O	SPI0 clock
				PWM_CH3	O	Channel 3 PWM output
				TM0_EXT	I	Timer0 external input
				ADC_CH0	AI	Channel 0 ADC input
35	28	-	-	P05	I/O	General-purpose digital input and output
				UART0_TX	O	UART0 TX
				SPI0_MISO	I/O	SPI0 MISO
				PWM_CH4	O	Channel 4 PWM output
36	29	17	-	VDD_FLASH	P	FLASH power input
37	30	-	-	P06	I/O	General-purpose digital input and output
				UART0_RX	I	UART0 RX
				SPI0_MISO	I/O	SPI0 MISO
				PWM_CH5	O	Channel 5 PWM output
				TM1_EXT	I	Timer1 external input
				AHB_CLK	O	AHB clock output
38	31	18	11	DVSS	P	Common ground terminal of DCDC power supply, independent power ground
39				VSS_BK		
40	32	19	12	VOUT_BK	P	DCDC voltage output
41	33	21	-	E-PAD	P	Chip bottom pad, common ground

Confidential

5 Electrical specification

Maximum and minimum values

In the notes below each table, the data obtained through comprehensive evaluation, design simulation and/or process features are not tested on the production line; based on the comprehensive evaluation, the minimum and maximum values are after the sample test. Take the average value and add and subtract three times the standard distribution (average ± 3 Σ).

5.1 RF characteristics

Table 5-1 RF characteristics

Symbol	Description	Conditions	Parameter			Unit
			Min	Typ	Max	
f_{OP}	Operating frequency		2400	-	2483	MHz
PLLres	PLL programming resolution		244	1M	-	Hz
DR	Data rate		0.125	-	2	Mbps
$\Delta f_{BLE,2M}$	Frequency deviation @ BLE 2Mbps		450	500	550	kHz
$\Delta f_{BLE,1M}$	Frequency deviation @ BLE 1Mbps		225	250	275	kHz
$\Delta f_{297,2M}$	Frequency deviation @ 297mode 2Mbps		450	500	550	kHz
$\Delta f_{297,1M}$	Frequency deviation @ 297mode 1Mbps		225	250	275	kHz
$\Delta f_{N,2M}$	Frequency deviation @ N-mode 2Mbps		-	320	-	kHz
$\Delta f_{N,1M}$	Frequency deviation @ N-mode 1Mbps		-	170	-	kHz
$f_{BLE,CS,2M}$	Channel spacing @ BLE 2Mbps		-	2	-	MHz
$f_{BLE,CS,1M}$	Channel spacing @ BLE 1Mbps		-	2	-	MHz
$f_{297,CS,2M}$	Channel spacing @ 297mode 2Mbps		-	2	-	MHz
$f_{297,CS,1M}$	Channel spacing @ 297mode 1Mbps		-	1	-	MHz
$f_{N,CS,2M}$	Channel spacing @ N-mode 2Mbps		-	2	-	MHz
$f_{N,CS,1M}$	Channel spacing @ N-mode 1Mbps		-	1	-	MHz

Table 5-2 TX characteristics

Symbol	Description	Conditions	Parameter			Unit
			Min	Typ	Max	
P_{RFTX}	Output power		-	-	9	dBm
P_{RFC}	RF power control range		-	40	-	dB
P_{RFCR}	RF power accuracy		-	-	±3	dB
$P_{RF1M,1}$	1st Adjacent Channel Transmit Power @1Mbps		-	-40	-	dBc
$P_{RF1M,2}$	2nd Adjacent Channel Transmit Power @1Mbps		-	-56	-	dBc
$P_{RF1M,\geq 3}$	3rd Adjacent Channel Transmit Power @1Mbps		-	-60	-	dBc

Confidential

$P_{RF2M,2}$	1st Adjacent Channel Transmit Power @2Mbps		-	-37	-	dBc
$P_{RF2M,4}$	2nd Adjacent Channel Transmit Power @2Mbps		-	-58	-	dBc
$P_{RF2M,\geq 6M}$	3rd Adjacent Channel Transmit Power @2Mbps		-	-60	-	dBc
P_{BW1M}	20dB bandwidth @1Mbps		-	1.3	-	MHz
P_{BW2M}	20dB bandwidth @2Mbps		-	2.3	-	MHz
$P_{SP,1}$	Spurious @≤1GHz		-	-	-73	dBm
$P_{SP,2}$	Spurious @≥1GHz		-	-	-49	dBm

Table 5-3 RX characteristics

Symbol	Description	Conditions	Parameter			Unit
			Min	Typ	Max	
$P_{RX,MAX}$	Receive maximum input power		-	0	-	dBm
$P_{SENS,1M,BLE}$	Sensitivity, 1Mbps BLE		-	-96	-	dBm
$P_{SENS,2M,BLE}$	Sensitivity, 2Mbps BLE		-	-93	-	dBm
$P_{SENS,125K,BLE}$	Sensitivity, 125kbps BLE		-	-99	-	dBm
$P_{SENS,500K,BLE}$	Sensitivity, 500kbps BLE		-	-99	-	dBm
$P_{SENS,250K,B}$	Sensitivity, 250kbps B mode	Sensitivity, 1Mbps ideal transmitter, ≤37 bytes, BER = 0.1% is presented.	-	-99	-	dBm
$P_{SENS,1M,297}$	Sensitivity, 1Mbps 297 mode		-	-93	-	dBm
$P_{SENS,2M,297}$	Sensitivity, 2Mbps 297 mode		-	-91	-	dBm
$P_{SENS,250K,297}$	Sensitivity, 250kbps 297 mode		-	-99	-	dBm
$P_{SENS,1M,N}$	Sensitivity, 1Mbps N-mode		-	-93	-	dBm
$P_{SENS,2M,N}$	Sensitivity, 2Mbps N-mode		-	-91	-	dBm
$P_{SENS,250K,N}$	Sensitivity, 250kbps N-mode		-	-99	-	dBm
$C/I_{CO,1M,BLE}$	Co-Channel interference@1Mbps		-	6	-	dB
$C/I_{1M,1M,BLE}$	Adjacent (1 MHz) interference@1Mbps		-	-3	-	dB
$C/I_{2M,1M,BLE}$	Adjacent (2 MHz) interference @1Mbps		-	-40	-	dB
$C/I_{\geq 3M,1M,BLE}$	Adjacent (≥3 MHz) interference @1Mbps		-	-45	-	dB
$C/I_{Image,1M,BLE}$	Image frequency interference @1Mbps		-	-23	-	dB
$C/I_{Image\pm 1M,1M,BLE}$	Adjacent (±1MHz) interference to in-band image frequency @1Mbps		-	-38	-	dB
$C/I_{\geq 6M,1M,BLE}$	Adjacent (≥6 MHz) interference @1Mbps		-	-45	-	dB
$C/I_{CO,2M,BLE}$	Co-Channel interference @2Mbps		-	7	-	dB
$C/I_{2M,2M,BLE}$	Adjacent (2 MHz) interference @2Mbps		-	-3	-	dB
$C/I_{4M,2M,BLE}$	Adjacent (4 MHz) interference @2Mbps		-	-37	-	dB

Confidential

$C/I_{\geq 6M,2M,BLE}$	Adjacent (≥6 MHz) interference @2Mbps		-	-35	-	dB
$C/I_{Image,2M,BLE}$	Image frequency interference @2Mbps		-	-23	-	dB
$C/I_{Image\pm 2M,2M,BLE}$	Adjacent (±2 MHz) interference to in-band image frequency		-	-36	-	dB
$C/I_{\geq 12M,2M,BLE}$	Adjacent (≥12 MHz) interference @2Mbps		-	-35	-	dB
$C/I_{CO,125K,BLE}$	Co-Channel interference @125kbps		-	-6	-	dB
$C/I_{1M,125K,BLE}$	Adjacent (1 MHz) interference @125kbps		-	-13	-	dB
$C/I_{2M,125K,BLE}$	Adjacent (2 MHz) interference @125kbps		-	-37	-	dB
$C/I_{\geq 3M,125K,BLE}$	Adjacent (≥3MHz) interference @125kbps		-	-49	-	dB
$C/I_{Image,125K,BLE}$	Image frequency interference @125kbps		-	-31	-	dB
$C/I_{Image\pm 1M,125K,BLE}$	Adjacent (±1MHz) interference to in-band image frequency @125kbps		-	-48	-	dB
$C/I_{CO,500K,BLE}$	Co-Channel interference @500kbps		-	1	-	dB
$C/I_{1M,500K,BLE}$	Adjacent (1 MHz) interference @500kbps		-	-6	-	dB
$C/I_{2M,500K,BLE}$	Adjacent (2 MHz) interference @500kbps		-	-31	-	dB
$C/I_{\geq 3M,500K,BLE}$	Adjacent (≥3MHz) interference @500kbps		-	-43	-	dB
$C/I_{Image,500K,BLE}$	Image frequency interference @500kbps		-	-25	-	dB
$C/I_{Image\pm 1M,500K,BLE}$	Adjacent (±1MHz) interference to in-band image frequency @500kbps		-	-41	-	dB

Table 5-4 RSSI characteristics

Symbol	Description	Conditions	Parameter			Unit
			Min	Typ	Max	
$RSSI_{RFC}$	RSSI indication range		-90	-	-15	dBm
$RSSI_{Auu}$	RSSI accuracy		-	±2	-	dB
$RSSI_{Res}$	RSSI resolution		-	0.25	-	dB
$RSSI_{Per}$	RSSI Sample period		-	0.25	-	us

Table 5-5 RF Timing characteristics

Symbol	Description	Conditions	Parameter			Unit
			Min	Typ	Max	
T_{RX-TX}	The time taken to switch from RX to TX or TX to RX		-	150	-	us

Confidential

Table 5-6 RF power characteristics

Symbol	Description	Conditions	Parameter			Unit
			Min	Typ	Max	
$I_{TX,P9dBm,DCDC}$	TX only run current 9dBm @DC-DC		-	13.97	-	mA
$I_{TX,P6dBm,DCDC}$	TX only run current 6dBm @DC-DC		-	9.59	-	mA
$I_{TX,P4dBm,DCDC}$	TX only run current 4dBm @DC-DC		-	6.67	-	mA
$I_{TX,P0dBm,DCDC}$	TX only run current 0dBm @DC-DC		-	5.06	-	mA
$I_{TX,P-4dBm,DCDC}$	TX only run current -4dBm @DC-DC		-	2.56	-	mA
$I_{TX,P-8dBm,DCDC}$	TX only run current -8dBm @DC-DC		-	2.15	-	mA
$I_{TX,P-12dBm,DCDC}$	TX only run current -12dBm @DC-DC		-	1.87	-	mA
$I_{TX,P-16dBm,DCDC}$	TX only run current -16dBm @DC-DC		-	1.64	-	mA
$I_{TX,P-20dBm,DCDC}$	TX only run current -20dBm @DC-DC		-	1.53	-	mA
$I_{TX,P-40dBm,DCDC}$	TX only run current -40dBm @DC-DC		-	1.12	-	mA
$I_{TX,P9dBm,LDO}$	TX only run current 9dBm @LDO		-	35.55	-	mA
$I_{TX,P6dBm,LDO}$	TX only run current 6dBm @LDO		-	16.28	-	mA
$I_{TX,P4dBm,LDO}$	TX only run current 4dBm @LDO		-	12.1	-	mA
$I_{TX,P0dBm,LDO}$	TX only run current 0dBm @LDO		-	9.43	-	mA
$I_{TX,P-4dBm,LDO}$	TX only run current -4dBm @LDO		-	5.74	-	mA
$I_{TX,P-8dBm,LDO}$	TX only run current -8dBm @LDO		-	5.08	-	mA
$I_{TX,P-12dBm,LDO}$	TX only run current -12dBm @LDO		-	4.62	-	mA
$I_{TX,P-16dBm,LDO}$	TX only run current -16dBm @LDO		-	4.04	-	mA
$I_{TX,P-20dBm,LDO}$	TX only run current -20dBm @LDO		-	3.92	-	mA
$I_{TX,P-40dBm,LDO}$	TX only run current -40dBm @LDO		-	3.00	-	mA
$I_{RX,1M,DCDC}$	RX 1Mbps current @DC-DC		-	2.50	-	mA
$I_{RX,2M,DCDC}$	RX 2Mbps current @DC-DC		-	2.71	-	mA
$I_{RX,1M,LDO}$	RX 1Mbps current @LDO		-	4.82	-	mA
$I_{RX,2M,LDO}$	RX 2Mbps current @LDO		-	5.67	-	mA

Test conditions and methods.

1. Transceiver power consumption tested in 1M mode using BLE ADV broadcast mode.
2. 2M mode is used is the power consumption when BLE connection.
3. The power consumption tested is the RF peak power.
4. The test method uses the total power consumption minus the power consumption of the MCU when the RF is not operating to calculate the final power consumption.
5. The sample software tested is based on peripheral_hr.
6. 3.3V Power Supply

Confidential

5.2 GPIO characteristics

Table 5-7 GPIO characteristics (single IO)

Symbol	Description	Conditions	Parameter			Unit
			Min	Typ	Max	
V_{IH}	Input high voltage	T_A=25°C	0.7*VDD	-	VDD	V
V_{IL}	Input low voltage	Load capacitance =20pF, T_A=25°C	VSS	-	0.2*VDD	V
V_{HYS}	Input hysteresis voltage, $V_{hys}=V_{IH}-V_{IL}$	T_A=25°C	-	-	0.3*VDD	V
C_{Iana}	Analog input capacitors	T_A=25°	-	300	-	fF
I_{Lkg}	Leakage current, open-drain mode or input mode	VDD≤VIN≤3.6V	-	-	TBD	uA
R_{PU}	Pull-up resistor	Vin =VSS，VDD =3.3V	-	50	-	kΩ
R_{PD}	Pull-down resistor	Vin =VSS，VDD =3.3V	-	100	-	kΩ
V_I	Input voltage	T_A=25°C	VSS	-	VDD	V
V_O	Output voltage	T_A=25°C	VSS	-	VDD	V
I_{source}	Source current（Push-pull output）（Except for P03, P15）	Vin =VDD-0.5V	8.5	9.5	10.5	mA
	Source current（Push-pull output）（P03, P15）		21	22	23	mA
I_{Sink}	Sink current（Push-pull output）	Vin =VSS+0.5V, T_A=25°C	19.5	20.5	21.5	mA
f_{Port_CLK}	IO output frequency	Load capacitance =20pF	-	-	48	MHz

Table 5-8 Combined test

Description	Conditions	Status	Remark
IO default state after power on	VDD=3.3V ,T_A=25°C	P00, P01: Pull-up input state Others: High resistance state	
IO status in deepsleep mode	VDD=3.3V ,T_A=25°C	Deepsleep: All gpio retention Standby_m1: All gpio retention Standby_m0: P00, P01, P02 retention	
IO status at reset	VDD=3.3V ,T_A=25°C	P00, P01: Pull-up input state Others: High resistance state	

Confidential

Table 5-9 nRESET Input Characteristics

Symbol	Description	Conditions	Parameter			Unit
			Min	Typ	Max	
V_{ILR}	Negative threshold voltage, nRESET	VDD=1.8V-3.3V ,T_A=25°C	-	-	0.22*VDD	V
V_{IHR}	Positive threshold voltage, nRESET	VDD=1.8V-3.3V ,T_A=25°C	0.48*VDD	-	-	V
V_{hys_rst}	Schmitt Trigger Voltage Hysteresis	VDD=1.8V-3.3V ,T_A=25°C	-	-	0.26*VDD	V
R_{RST}	nRESET pin internal pull-up resistor	VDD=3.3V ,T_A=25°C	-	7.5	-	kΩ
$t_{FR,\ 0.3pF}$	nRESET pin input filter pulse time	VDD=3.3V ,T_A=25°C	-	TBD	-	ns

5.3 Reset characteristics

Table 5-10 Reset characteristics

Symbol	Description	Conditions	Parameter			Unit
			Min	Typ	Max	
V_{BOD}	Brown-out detection voltage threshold	BODSEL<2:0> = 000(falling edge), dVDD/dt≤3V/s	-	1.84	-	V
		BODSEL<2:0> = 001(falling edge), dVDD/dt≤3V/s	-	1.96	-	
		BODSEL<2:0> = 010(falling edge), dVDD/dt≤3V/s	-	2.05	-	
		BODSEL<2:0> = 011(falling edge), dVDD/dt≤3V/s	-	2.16	-	
		BODSEL<2:0> = 100(falling edge), dVDD/dt≤3V/s	-	2.25	-	
		BODSEL<2:0> = 101(falling edge), dVDD/dt≤3V/s	-	2.35	-	
		BODSEL<2:0> = 110(falling edge), dVDD/dt≤3V/s	-	2.47	-	
V_{BODhys}	BOD hysteresis voltage	dVDD/dt≤3V/s	100	-	160	mV
T_{BOD_RE1}	BOD response Time(Normal mode)	dVDD/dt≤3V/s	1	32	32	Slow clock
I_{BOD}	BOD operating current	dVDD/dt≤3V/s	-	0.5	-	uA
V_{POR}	Power on reset voltage threshold	Rising edge, dVDD/dt≤3V/s	-	1.71	-	V
		Falling edge, dVDD/dt≤3V/s	-	1.69	-	V
T_{POR}	POR settling time	VDD =3.3V	-	1.12	-	ms
V_{LVR}	LVR detection voltage threshold	Falling edge, dVDD/dt≤3V/s	-	1.85	-	V
T_{LVR_RE}	LVR response time	T_A=25°C, dVDD/dt≤3V/s	1	32	32	Slow clock
I_{LVR}	LVR operating current	T_A=25°C, dVDD/dt≤3V/s	-	0.1	-	uA

Confidential

5.4 Clock characteristics

Table 5-11 HXTAL characteristics

Symbol	Description	Conditions	Parameter			Unit
			Min	Typ	Max	
f_{HXTL}	High speed crystal oscillator (HXTAL) frequency	VDD=3.3V ,T_A=25°C	-	32	-	MHz
$C_{LoadHXTL}$	Crystal load capacitance	VDD=3.3V ,T_A=25°C	7	9	12	pF
I_{DDHXTL}	HXTAL oscillator operating current	VDD=3.3V ,T_A=25°C	-	250	-	µA
t_{SUHXTL}	HXTAL oscillator startup time	VDD=3.3V ,T_A=25°C, ESR=40Ω, C_{HXTL}= 9pF	-	465	-	µs
$t_{SUHXTL\ Quick}$	HXTAL oscillator Quick startup time	VDD=3.3V ,T_A=25°C, ESR=40Ω, C_{HXTL}= 9pF	-	155	-	µs
ESR_{HXTL}	Equivalent series resistance	VDD=3.3V ,T_A=25°C	-	40	-	Ω
$F_{TOLHXTL}$	Frequency tolerance for the crystal	VDD=3.3V ,T_A=25°C	-20	-	20	ppm
PD_{HXTL}	Drive level	VDD=3.3V ,T_A=25°C	-	-	100	µW

Table 5-12 LXTAL characteristics

Symbol	Description	Conditions	Parameter			Unit
			Min	Typ	Max	
f_{LXTL}	Low speed crystal oscillator (LXTAL) frequency	VDD=3.3V ,T_A=25°C	-	32.768	-	kHz
I_{DDLXTL}	LXTAL oscillator operating current	VDD=3.3V ,T_A=25°C	0.3	0.45	0.67	µA
t_{SULXTL}	LXTAL oscillator Normal startup time	VDD=3.3V ,T_A=25°C	330	550	1500	ms
$t_{SULXTL\ Quick}$	LXTAL oscillator Quick startup time	VDD=3.3V ,T_A=25°C	-	125	-	ms
ESR_{LXTL}	Equivalent series resistance	VDD=3.3V ,T_A=25°C	-	70	-	kΩ
$F_{TOLLXTL}$	Frequency tolerance for the crystal	VDD=3.3V ,T_A=25°C	-20	-	20	ppm
$C_{LoadLXTL}$	Crystal load capacitance	VDD=3.3V ,T_A=25°C	-	7	-	pF
PD_{LXTL}	Drive level	VDD=3.3V ,T_A=25°C	-	-	1	µW

Table 5-13 32MHz RCH characteristics

Symbol	Description	Conditions	Parameter			Unit
			Min	Typ	Max	
f_{IRC32M}	Crystal frequency	VDD=3.3V ,T_A=25°C	-	32	-	MHz
ACC_{IRC32M}	Frequency accuracy	VDD=3.3V, T_A=-40°C to +105°C	-	-	-	%
		VDD=3.3V, T_A=-20°C to +85°C	-	-	-	%
		VDD=3.3V, T_A=25°C	-	±1	-	%
D_{IRC32M}	IRC32M oscillator duty cycle	VDD=3.3V, f_{IRC32M}=32MHz, T_A=25°C	48	50	52	%

Confidential

$I_{DDIRC32M}$	Operating current	VDD=3.3V, f_{IRC32M}=32MHz, T_A=25°C	-	82	-	µA
$t_{SUIRC32M}$	Startup time	VDD=3.3V, f_{IRC32M}=32MHz, T_A=25°C	-	5	-	µs
$d_{fIRC32M}$	25°C, the frequency drifts with the supply voltage	VDD=1.8V to 3.6V, T_A=25°C	-	0.5	-	%/V

Table 5-14 32kHz RCL characteristics

Symbol	Description	Conditions	Parameter			Unit
			Min	Typ	Max	
f_{IRC32k}	Crystal frequency	VDD=3.3V ,T_A=25°C	-	32	-	kHz
ACC_{IRC32K}	Frequency accuracy	VDD=3.3V, T_A=25°C (After calibration）	-	±500	-	ppm
D_{IRC32K}	IRC32K oscillator duty cycle	VDD=3.3V, f_{IRC32K}=32kHz, T_A=25°C	48	50	52	%
$I_{DDIRC32K}$	Operating current	VDD=3.3V, f_{IRC32K}=32kHz, T_A=25°C	-	310	-	nA
$t_{SUIRC32K}$	Startup time	VDD=3.3V, f_{IRC32K}=32kHz, T_A=25°C	-	480	-	µs
df_{IRC32K}	25°C, The frequency drifts with the supply voltage	VDD=1.8V to 3.6V, T_A=25°C	-	1	-	%/V

Table 5-15 DPLL characteristics

Symbol	Description	Conditions	Parameter			Unit
			Min	Typ	Max	
f_{PLLIN}	PLL input clock frequency	VDD=3.3V, T_A=25°C	-	32	-	MHz
f_{PLL}	PLL output clock frequency	VDD=3.3V, T_A=25°C	48	48	48	MHz
I_{PLL}	Operating current	VDD=3.3V, T_A=25°C	96	105	145	µA

5.5 ADC characteristics

Table 5-16 Power supply and input range conditions

Symbol	Description	Conditions	Parameter			Unit
			Min	Typ	Max	
$V_{Ax(VBG\ adc)}$	Analog input voltage range，VBG（1.2V）	VDD=3.3V, T_A=25°C	0.1	-	1.1	V
$V_{Ax(VDD)}$	Analog input voltage range，VDD	VDD=3.3V, T_A=25°C	0.1	-	VDD-0.1	V
I_{ADC}	ADC supply current	VDD=3.3V, T_A=25°C Fadc=16MHz	-	0.55	-	mA

Confidential

C_{sample}	Internal sample and hold capacitors (PAD and PCB capacitors not included)		-	10	-	pF
R_{ADC}	Sampling switch resistance	0V ≤ VAx ≤ VDD	-	300	-	Ω
R_{In}	External input impedance, continuous sampling	0V ≤ VAx ≤ VDD	0.86	-	4734.70	kΩ

Table 5-17 ADC built-in voltage reference

Symbol	Description	Conditions	Parameter			Unit
			Min	Typ	Max	
VBG_{ADC}	Internal 1.2V Reference Voltage	VDD=3.3V, T_A=25°C	1.1	1.2	1.3	V
T_{Coef}	Temperature factor	T_A=-40°C to 105°C; VDD=1.8V to 3.6V	-	30	-	ppm/°C

Table 5-18 Time parameters

Symbol	Description	Conditions	Parameter			Unit
			Min	Typ	Max	
F_{ADC}	ADC clock frequency	VDD=3.3V, T_A=25°C	4	16	24	MHz
T_S	Sample time	VDD=3.3V, T_A=25°C	4	1539	8192	$1/F_{adc}$
T_{CONV}	Conversion time	VDD=3.3V, T_A=25°C	32	1580	8298	$1/F_{adc}$

Table 5-19 Linearity parameter

Symbol	Description	Conditions	Parameter			Unit
			Min	Typ	Max	
INL	Integral linearity error	VDD=3.3V, T_A=25°C	-	-	±3	LSB
DNL	Differential linearity error	VDD=3.3V, T_A=25°C	-	-	±2	LSB
SNR	Signal to Noise Ratio	Fadc = 16MHz Input Clock 250kHz VDD=3.3V, T_A=25°C	-	64.3	-	dB
THD	Total harmonic distortion		-	75	-	dB
SFDR	Spurious-free signal dynamic range		-	77.29	-	dB
ENOB	Effective number of bits		-	10.33	-	Bit

Table 5-20 RIN

ADC significant bit	F_{ADC}(MHz)	Ts(cycles)	Ts(us)	Rinmax(kΩ)
12	32	4	0.125	0.86
12	32	8	0.25	2.01
12	32	32	1	8.95

Confidential

12	32	64	2	18.20
12	32	128	4	36.69
12	32	8192	256	2367.20
12	16	4	0.25	2.01
12	16	8	0.5	4.32
12	16	32	2	18.20
12	16	64	4	36.69
12	16	128	8	73.68
12	16	8192	512	4734.70

Note: The sampling condition is continuous sampling.

5.6 PMU characteristics

Table 5-21 PMU characteristics

Symbol	Description	Conditions	Parameter			Unit
			Min	Typ	Max	
DVDD	DVDD output voltage range, external capacitor	VDD=3.3V, T_A=25°C	1.1	1.2	1.4	V
VDD_FLASH*	VDD_FLASH output voltage range, external capacitor	VDD=3.3V, T_A=25°C	1.8	-	VDD	V

Note: VDD_FLASH output is 1.8V or VDD.

5.7 General operating conditions

Table 5-22 General operating conditions

Symbol	Description	Conditions	Parameter			Unit
			Min	Typ	Max	
VDD*	Operating voltage (DCDC-OFF)	T_A=25°C	1.8	-	3.6	V
	Operating voltage (DCDC-ON)		2.0	-	3.6	V
T_{ST}	Storage temperature	-	-65	-	150	℃
T_A	Ambient temperature	-	-40	-	105	℃
$T_{J\text{-}QFN32}$	Junction temperature	QFN32 4x4x0.75-P0.4	-40	-	125	℃
$R_{\theta JA\text{-}QFN32}$	Thermal resistance	QFN32 4x4x0.75-P0.4	-	41	-	℃/W

Note: VDD = VBAT

Confidential

5.8 DCDC characteristics

Table 5-23 DCDC characteristics

Symbol	Description	Conditions	Parameter			Unit
			Min	Typ	Max	
V_{IN_DCDC}	Input voltage range	VDD=3.3V, T_A=25°C	2	-	3.6	V
V_{OUT_DCDC}	Output voltage range	VDD=3.3V, T_A=25°C	1.2	1.5	2	V
T_{EN_DCDC}	Standup time	VDD=3.3V , I_{LOAD}=10mA, T_A=25°C, L_{DCR}=80mΩ	-	200	-	us
η	Efficiency	VDD=3.3V , I_{LOAD}=10mA, T_A=25°C, L_{DCR}=80mΩ	-	88	-	%
$VRPL_{DCDC}$	Ripple	VDD=3.3V, T_A=25°C	-	43	-	mv
I_{OUT}	Drive peak current	VDD=3.3V, T_A=25°C	-	100	-	mA
I_{AVG}	Drive average current	VDD=3.3V, T_A=25°C	-	30	-	mA
L_{DCDC}	Effective inductance	VDD=3.3V, T_A=25°C	-	2.2	-	µH
C_{OUT_DCDC}	Effective load capacitance	VDD=3.3V, T_A=25°C	1	4.7	-	µF
F_{osc_DCDC}	Oscillation frequency	VDD=3.3V, T_A=25°C	-	-	1000	kHz

5.9 ESD characteristics

Table 5-24 ESD characteristics

Symbol	Description	Conditions	Parameter			Unit
			Min	Typ	Max	
VESDHBM[1]	ESD @ Human Body Mode	T_A=25°C	-	±4	-	kV
VESDCDM[2]	ESD @ Charge Device Mode	T_A=25°C	-	±2000	-	V
VESDMM[3]	ESD @ Machine Mode	T_A=25°C	-	±200	-	V
$I_{latchup}$[4]	Latch up current	T_A=25°C	-	±500	-	mA

Notes:

1. Determined by ANSI/ESDA/JEDEC JS-001 standard, Electrostatic Discharge Sensitivity Test - Human Body Model (HBM) - Device Level
2. Determined according to ANSI/ESDA/JEDEC JS-002 Electrostatic Discharge Sensitivity (ESD) Test Standard.
3. Determined according to JESD22-A115-C electrostatic discharge sensitivity (ESD) test standard.
4. Determined according to JEDEC EIA/JESD78 standard.

Confidential

5.10 Absolute maximum ratings

Table 5-25 Absolute maximum ratings

Symbol	Description	Conditions	Parameter			Unit
			Min	Typ	Max	
VDD[1]	Supply voltages	T_A=25°C	-0.3	-	3.6	V
VCC_RF	RF input voltage	T_A=25°C	-0.3	-	3.6	V
VIN	I/O pin voltage	T_A=25°C	VSS[2]	-	VDD	V
PVDD	Extreme power consumption	VDD=3.3V, T_A=25°C DCDC power supply	-	-	TBD	mW

Notes:

1. VDD = VBAT
2. VSS = GND

5.11 MCU current characteristics

Symbol	Parameter	Conditions	Clock（Hz）	DCDC OFF Typ(mA)	DCDC ON Typ(mA)
Run mode	All peripherals clock on, run while(1) in flash	System clock source：RCH (.cal 32M) [1]	4M	0.91	0.686
			8M	1.3	0.916
			16M	2.09	1.36
			32M	3.77	2.28
		System clock source：XTH (.off rch) [2]	4M	1.42	0.985
			8M	1.81	1.2
			16M	2.61	1.64
			32M	4.29	2.54
		System clock source：DPLL (.ref rch(.cal 32M)) (.base 48M) [3]	6M	1.56	1.05
			12M	2.15	1.38
			24M	3.4	2.05
			48M	5.71	3.44
		System clock source：DPLL (.ref xth) (.base 48M) (.off rch) [4]	6M	2.08	1.34
			12M	2.69	1.67
			24M	3.95	2.34
			48M	6.18	3.57
		System clock source：DPLL (.ref rch(.cal 32M)) (.base 64M) [5]	4M	1.39	0.953
			8M	1.78	1.17
			16M	2.58	1.61
			32M	4.27	2.51
		System clock source：DPLL (.ref xth) (.base 64M) (.off rch) [6]	4M	1.9	1.25
			8M	2.3	1.46
			16M	3.13	1.91
			32M	4.85	2.82

Confidential

	All peripherals clock off, run while(1) in flash	System clock source：RCH (.cal 32M) [1]	4M	0.736	0.523
			8M	0.943	0.719
			16M	1.37	0.963
			32M	2.23	1.43
		System clock source：XTH (.off rch) [2]	4M	0.945	0.723
			8M	1.15	0.84
			16M	1.57	1.07
			32M	2.42	1.54
		System clock source：DPLL (.ref rch(.cal 32M)) (.base 48M) [3]	6M	1.01	0.747
			12M	1.32	0.921
			24M	1.96	1.25
			48M	3.29	2.00
		System clock source：DPLL (.ref xth) (.base 48M) (.off rch) [4]	6M	1.22	0.903
			12M	1.54	1.05
			24M	2.19	1.41
			48M	3.54	2.12
		System clock source：DPLL (.ref rch(.cal 32M)) (.base 64M) [5]	4M	0.925	0.693
			8M	1.14	0.818
			16M	1.56	1.05
			32M	2.43	1.53
		System clock source：DPLL (.ref xth) (.base 64M) (.off rch) [6]	4M	1.14	0.831
			8M	1.35	0.947
			16M	1.78	1.18
			32M	2.66	1.66

Remark: Test conditions - DVDD=1.2V, VDD(VBAT)=3.3V, T_A=25°C

Notes:

1. Calibrate RCH to 32M and then divide.
2. Use XTH as the clock source. Turn off RCH and then divide.
3. Use RCH as the clock source for DPLL. Calibrate RCH to 32M and set DPLL to 48M, then divide.
4. Use XTH as the clock source for DPLL. Set DPLL to 48M and turn off RCH, then divide.
5. Use RCH as the clock source for DPLL. Calibrate RCH to 32M and set DPLL to 64M, then divide.
6. Use XTH as the clock source for DPLL. Set DPLL to 64M and turn off RCH, then divide.

Symbol	Parameter	Conditions		Typ(μA)
standby m0	wake by gpio			0.28
Symbol	**Parameter**	**Conditions**	**Clk source**	**Typ(μA)**
standby m1	wake by 32k timer	sw=0x0d [1]	XTL	1.88[2]
		sw=0x1f [1]	XTL	2.18[2]
	wake by gpio	sw=0x0d [1]		1.32[2]
		sw=0x1f [1]		1.63[2]
	wake by wdt	sw=0x0d [1]	XTL	1.85[2]
		sw=0x1f [1]	XTL	2.18[2]
	wake by lvr	sw=0x0d [1]		2.05[2]

Confidential

		sw=0x1f [1]		2.42[2]
	wake by bod	sw=0x0d [1]		2.11[2]
		sw=0x1f [1]		2.48[2]
Deepsleep	wake by 32k timer	sw=0x0d [1]	XTL	2.96[2]
		sw=0x1f [1]	XTL	3.37[2]
	wake by gpio	sw=0x0d [1]		2.46[2]
		sw=0x1f [1]		2.86[2]
	wake by wdt	sw=0x0d [1]	XTL	2.99[2]
		sw=0x1f [1]	XTL	3.37[2]
	wake by peripheral timer	sw=0x0d [1]	XTL	4.03[2] [3]
		sw=0x1f [1]	XTL	4.73[2]
	wake by 32k timer*	sw=0x0d [1]	XTL	4.06[2] [3]
		sw=0x1f [1]	XTL	4.69[2]
Sleep	wake by gpio	LDO all peripheral clocks on		4620
		LDO non-essential peripheral clocks off		1820
		DCDC all peripheral clocks on		2700
		DCDC non-essential peripheral clocks off		1210

Remark: Test conditions - DVDD=1.2V, VDD(VBAT)=3.3V, T_A=25°C, DCDC ON

*: PWM output enable.

Notes:

1. The sw indicates the module control switch for PAN107x power retention in low-power mode, bit 1 for power retention, bit 0 for power down, 0d = sram32k+phy_sram+cpu_retention,1f = all_sram_retention
2. In LPLDOH mode2, the lpldoh trim voltage does not take effect, and the effective voltage is the vref_trim voltage. The lpldoh undershoot does not occur in this mode, and the bottom current is reduced.
3. PWM can output waveforms normally in *Deepsleep* mode, but only in *Deepsleep* mode2, and see Note 4 for instructions on *Deepsleep* mode2.
4. When the register *LP_FL_CTRL [31]* is 1, the switch between LPLDOL and LPLDOH is connected, and LPLDOL enable is off. LPLDOH supplies power to LPLDOL. This is the mode 2. Mode 2 power consumption increases.

Confidential

6 Application Reference Diagram

Please visit the following address for the latest **Application Reference Diagram** and **hardware design notes**: PAN10xx Hardware Reference Design Guide

Confidential

7 Package Dimensions

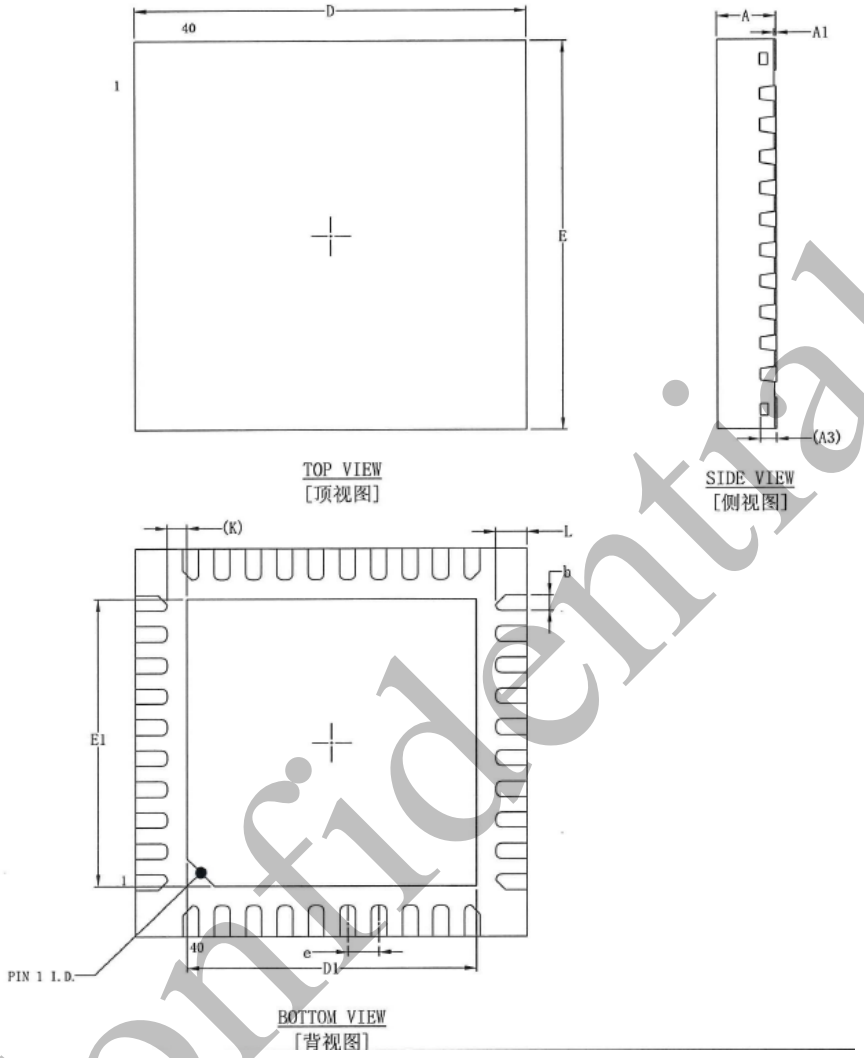

Figure 7-1 Package View for QFN40

Table 7-1 Package Dimension for QFN40

SYMBOL	MIN（mm）	NOM（mm）	MAX（mm）
A	0.70	0.75	0.80
A1	0.00	0.02	0.05
A3	0.203 REF		
b	0.15	0.20	0.25
D	4.90	5.00	5.10
D1	3.60	3.70	3.80
E	4.90	5.00	5.10
E1	3.60	3.70	3.80
e	0.40 BSC		
K	0.25 REF		
L	0.30	0.40	0.50

Confidential

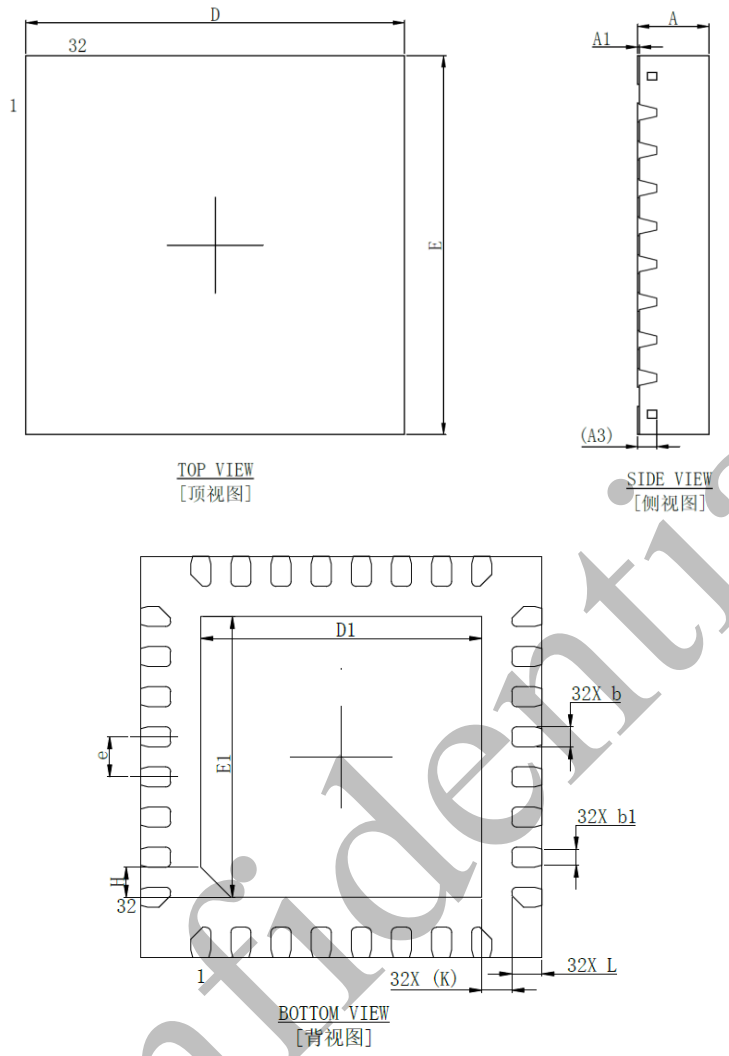

Figure 7-2 Package View for QFN32

Table 7-2 Package Dimension for QFN32

SYMBOL	MIN（mm）	NOM（mm）	MAX（mm）
A	0.70	0.75	0.80
A1	0.00	0.02	0.05
A3	0.203 REF		
b	0.15	0.20	0.25
b1	0.16 REF		
D	3.90	4.00	4.10
D1	2.65	-	2.90
E	3.90	4.00	4.10
E1	2.65	-	2.90
e	0.40 BSC		
K	0.30 REF		
L	0.20	-	0.40
H	0.30 REF		

Confidential

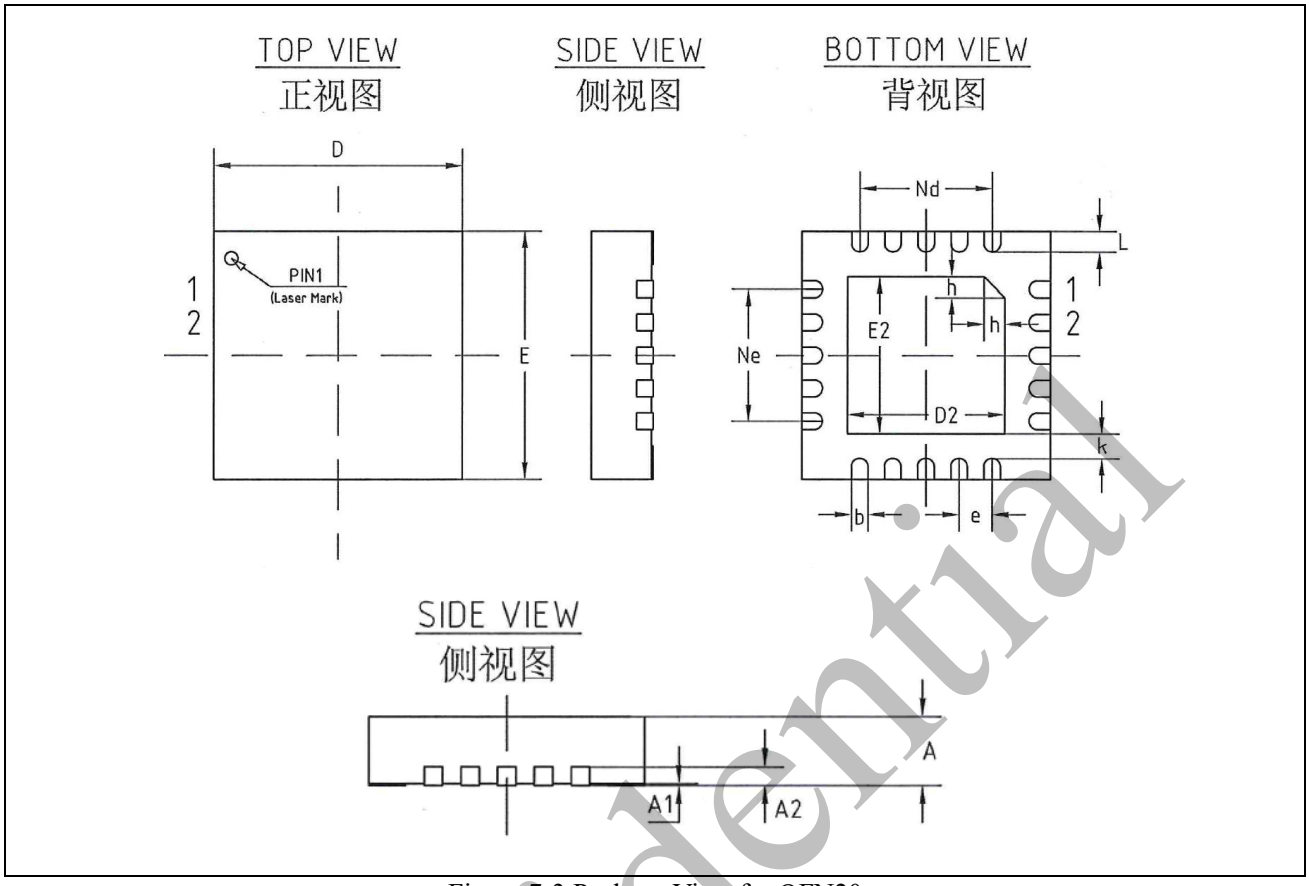

Figure 7-3 Package View for QFN20

Table 7-3 Package Dimension for QFN20

SYMBOL	MIN（mm）	NOM（mm）	MAX（mm）
A	0.70	0.75	0.80
A1	-	0.02	0.05
A3	0.203 REF		
b	0.15	0.20	0.25
D	2.90	3.00	3.10
D2	1.80	1.90	2.00
E	2.90	3.00	3.10
E2	1.80	1.90	2.00
e	0.40 BSC		
K	0.20	0.30	0.40
L	0.20	0.25	0.30
h	0.20	0.25	0.30
Ne	1.60 BSC		
Nd	1.60 BSC		

Confidential

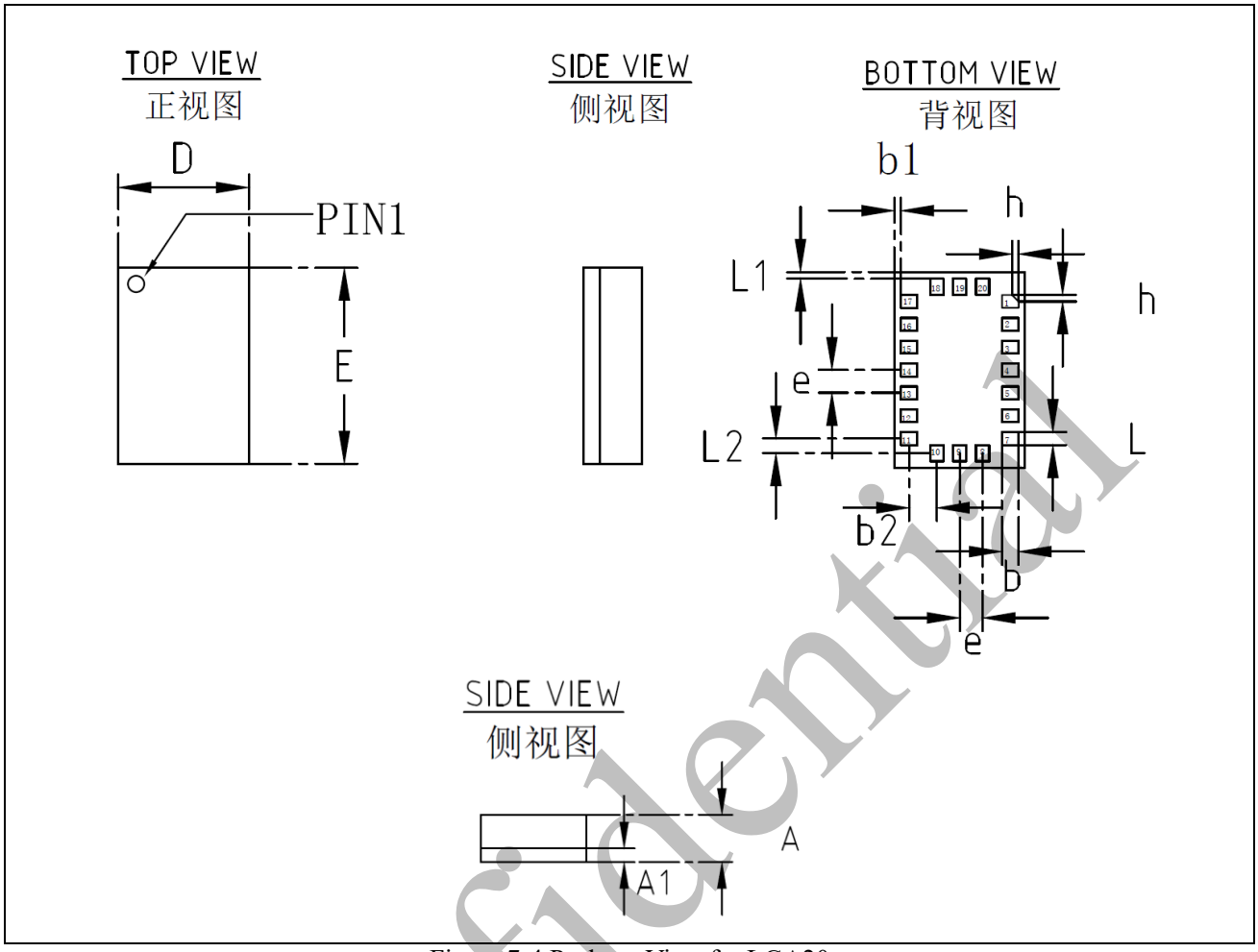

Figure 7-4 Package View for LGA20

Table 7-4 Package Dimension for LGA20

SYMBOL	MIN（mm）	NOM（mm）	MAX（mm）
A	0.825	0.900	0.975
A1	0.230	0.260	0.290
b	0.200	0.250	0.300
D	1.925	2.000	2.075
e	0.350BSC		
L1	0.100REF		
L2	0.225BSC		
b1	0.100REF		
b2	0.425BSC		
h	0.100REF		
E	2.925	3.000	3.075
L	0.150	0.200	0.250

Confidential

Abbreviation

ACK	Acknowledgement
ADC	Analog-to-Digital Converter
bandgap	Bandgap voltage reference
BLE	Bluetooth Low Energy
BOD	Brown-out Detector
BQB	Bluetooth Qualification Body
Cache	Cache memory
CDM	Charge Device Mode
CS	Chip Select
CTS	Clear To Send
DCDC	DC-to-DC converter
DMA	Direct Memory Access
DPLL	Digital Phase Locked Loop
eFuse	Electronic Fuse
ESD	Electro-Static discharge
ext	External IO port
ETSI	European Telecommunications Standards Institute
FCC	Federal Communications Commission
FMC	Flash Memory Controller
GPIO	General-purpose I/O
HBM	Human Body Mode
I2C	Inter-Integrated Circuit
IAP	In-Application-Programming
Keyscan	Key scan
Latch-up	Latch-up
LDO	Low dropout regulator
LED	LED
LVR	Low Voltage Reset
MCU	Micro Control Unit
MISO	Master input slave output
MM	Machine Mode
MOSI	Master output slave input
PLL	Phase Locked Loop
POR	Power-on Reset
PWM	Pulse Width Modulation
RAM	Random Access Memory
RC	Resistance Capacitance Crystal Oscillator
RF	Radio frequency
RSSI	Received Signal Strength Indication
RX	Receive
SDA	Serial Data
SoC	System on chip
SPI	Serial Peripheral Interface
SRAM	Static random access memory
SWD	Serial Wire Debug
TEMP	Temperature Sensor
TX	Transmit
RTS	Request To Send
UART	Universal Asynchronous Receiver/Transmitters
USB	Universal Serial Bus
WDT	Watchdog Timer
WWDT	Window Watchdog Timer
XTAL	External crystal oscillator

Confidential

Revision History

Version	Date	Content
1.0	Oct. 2023	Initial
1.1	Nov. 2023	Add the Application Reference Diagram. Corrected clerical error of pin12 and pin13 in the Pin Diagram. Corrected the name of pin31 in the Pin Diagram.
1.2	Dec. 2023	Update the Pin Information.
1.3	Jan. 2024	Add the PAN1070UAEC.
1.4	Mar. 2024	Add the Electrical specification.
1.5	Apr. 2024	Update the Key Features.
1.6	May. 2024	Update the Electrical specification. Update the Pin Diagram of the QFN20 package.
1.7	Nov. 2024	Update the Package Dimensions of the QFN32. Update the Application Reference Diagram. Update the Table 5-7. Update the Typ value of *standby m1* in the MCU current characteristics.
1.8	Dec. 2024	Update the Pin Information. Update the Table 5-7.
1.9	Mar. 2025	Add the QFN40 and LGA20 package.
2.0	May. 2025	Update the Table 5-16.

Internal version, for reference only.

USING THIS DOCUMENT

The information in this document is subject to change without notice. Every effort has been made in the preparation of this document to ensure the accuracy of the contents, but all statements, information, and recommendations in this document do not constitute a warranty of any kind, express or implied.

TRADEMARKS

Other names mentioned in this document are trademarks/registered trademarks of their respective owners.

DISCLAIMER

All or part of the products, services and features described in this document may not be within the purchase scope or the usage scope. Unless otherwise specified in the contract, all statements, information, and recommendations in this document are provided “AS IS” without warranties, guarantees or representations of any kind, either express or implied.

Confidential

Contact Us

Shanghai Panchip Microelectronics Co., Ltd.
The 302 Room of Building D, No. 666 Shengxia Road
Zhangjiang Hi-Tech Park, Shanghai
People's Republic of China

021-50802371
http://www.panchip.com

Confidential